PvNP

Manual

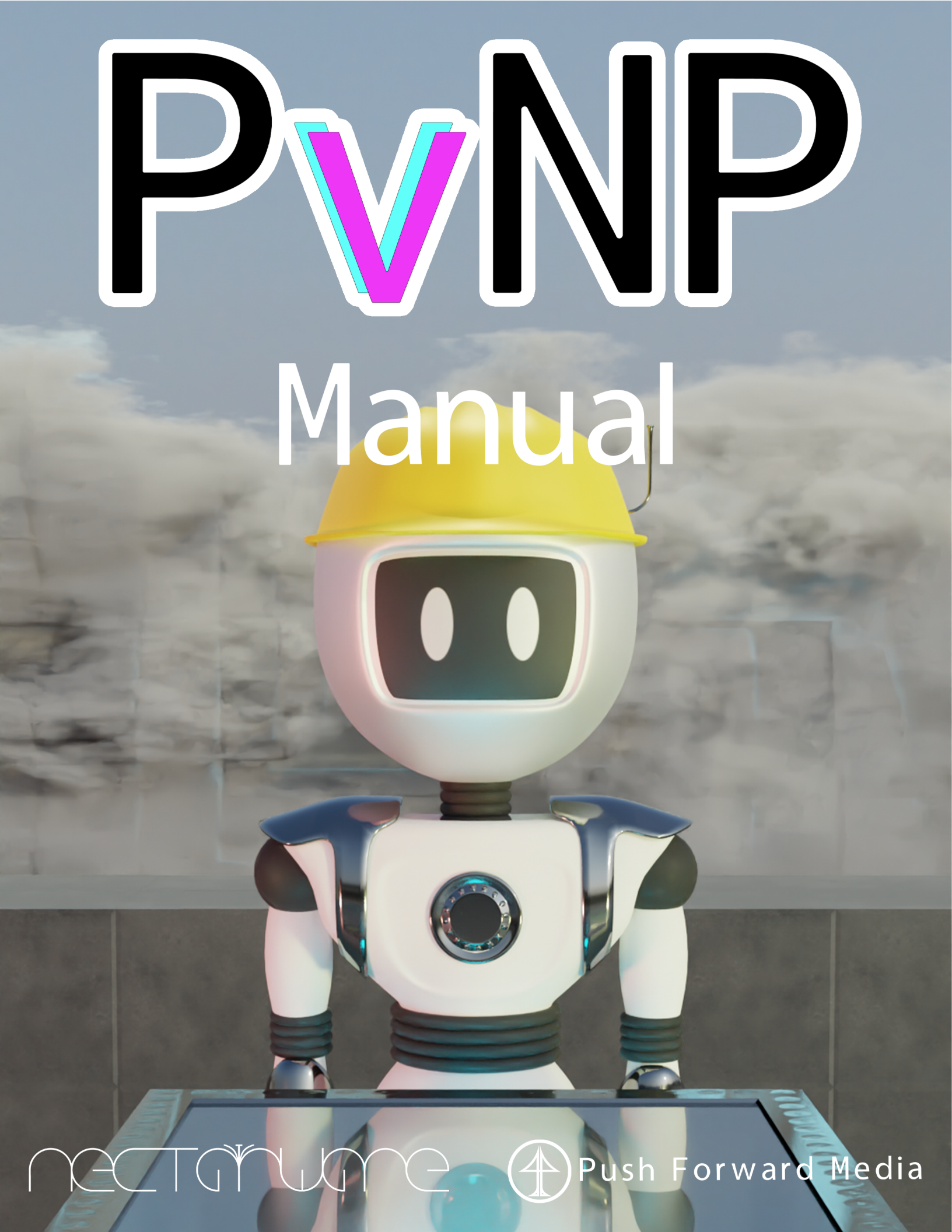

nectarware

Push Forward Media

Table of Contents

About the Game.....1
Controls.....2
Getting Started.....3
Gameplay.....4
Credits.....8

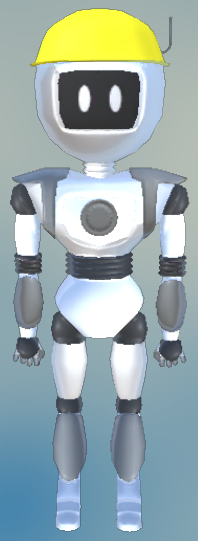

About the Game

PVNP is a Sokoban-inspired puzzle game. You are Powerbot 2000, the last functioning automaton in a massive floating warehouse. Your purpose: to return each Power Cube to a Power Cube Storage Area.

Navigate Power Cubes through increasingly complex, maze-like puzzles. With each puzzle solve, you'll unlock a door to the next puzzle and progress through new areas of the warehouse, connected by heady airwalks.

Complete each of the 50+ unique puzzles in the fewest steps you can.

Controls

XBox Controller

Left Joystick or D-Pad Up.....Move up

Left Joystick or D-Pad Down.....Move down

Left Joystick or D-Pad Left.....Move left

Left Joystick or D-Pad Right.....Move right

B.....Press once to undo your last move. Hold to reset the puzzle.

Menu....Go to the pause screen. From the pause screen, press **Menu** to return to your game. Hold **Menu** to quit to the main menu.

Keyboard

W or Up Arrow.....Move up

S or Down Arrow.....Move down

A or Left Arrow.....Move left

D or Right Arrow.....Move right

R.....Press once to undo your last move. Hold to reset the puzzle.

Esc....Go to the pause screen. From the pause screen, press **Esc** to return to your game. Hold **Esc** to quit to the main menu.

Getting Started

Title screen

Before you start your game, take a minute to get to know the title screen. Start a new game, continue your game, or quit the software by pushing the Power Cubes to the action you want to take.



Head down the airwalk for more options. From here, push the Power Cubes to adjust the volume of the music and sound effects and choose your display options.

Pause screen

Pressing Menu or Esc at any time during the game will take you to the pause screen.

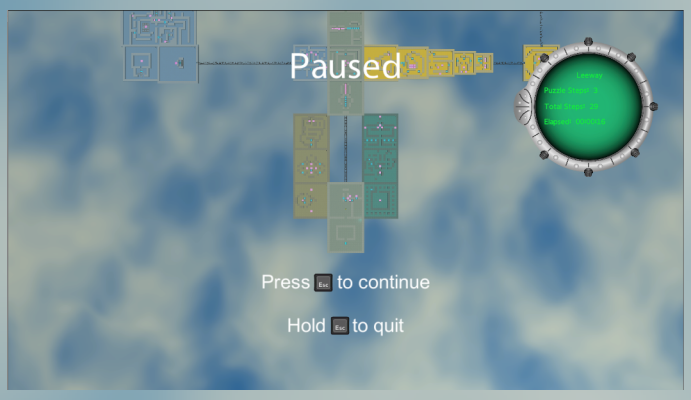

Stepometer - In the top right, view your steps in the current puzzle, your total game steps, and gameplay time.

Warehouse Schematics - Your overview of the warehouse, including the different areas and puzzles. Your location in the

Gameplay

Your goal is to move Power Cubes through a maze of walls and other obstacles into designated spots.

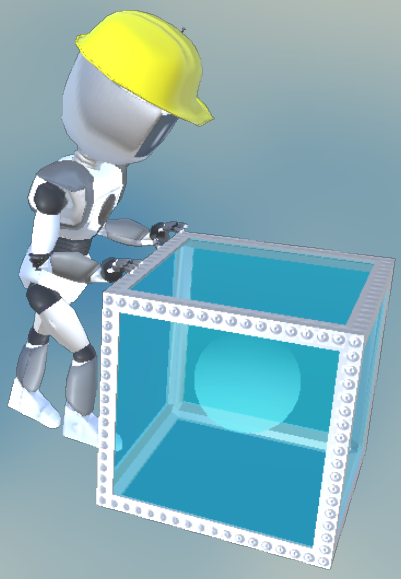

You can move up, down, left, or right

You can push Power Cubes in any direction

Power Cubes can’t be pulled

Power Cubes can only be moved into an empty space

Any Power Cube can go in any storage area within the puzzle

All Power Cubes must be placed in a storage area to complete the puzzle

Try to complete puzzles in the fewest steps possible

The game is a semi open world design. You can move freely through any puzzle you’ve completed.

Gameplay

You can undo your last move or reset the entire puzzle at any time by pressing B (XBox) or R (Keyboard) on any puzzle. A ring will appear indicating what action you'll take. If you release while the ring is blue you will undo your last move. If you hold until the ring turns red and completes it's circle the entire puzzle will reset. Move history is reset when you enter a new puzzle.

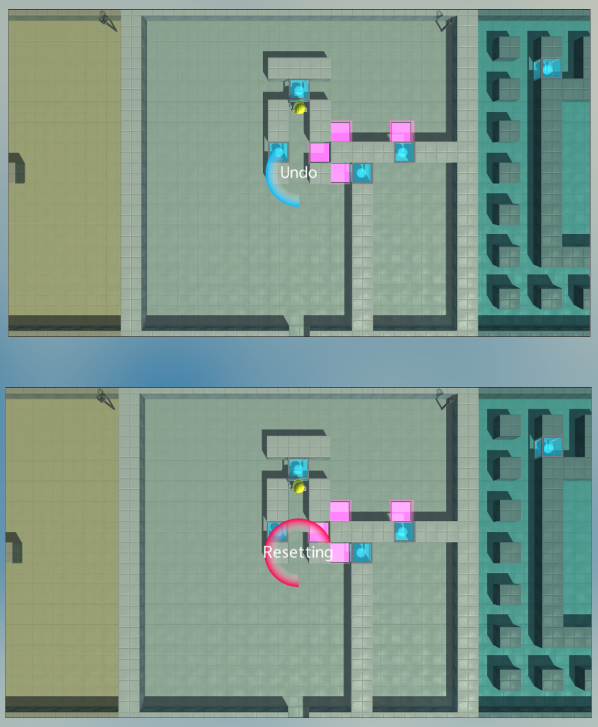

Powerbot 2000—The tireless warehouse automaton tasked with properly storing the Power Cubes. Powerbot 2000 will go into power-saving mode if left idle for too long, and may take a second to power back up.



Gameplay

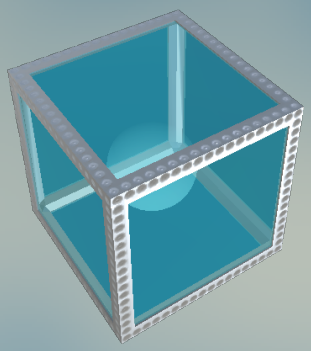

Power Cubes—These cubes will be scattered throughout each puzzle. Each cube needs to be moved to a Power Cube Storage Area.

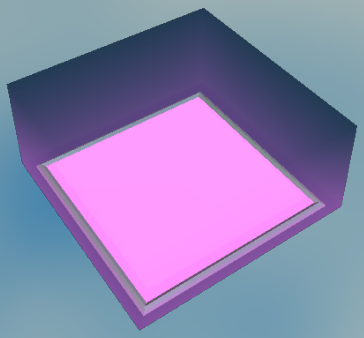

Power Cube Storage Areas—Each puzzle will have the same number of Power Cube Storage Areas as Power Cubes. When each Storage Area is filled with a Power Cube, the puzzle is complete.

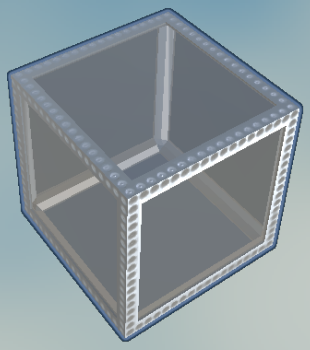

Void Cubes—As you progress, you'll encounter Void Cubes. You can push these the same way you push Power Cubes. Their location doesn't affect a puzzle's solution, but you may find that they need to be moved out of the way.

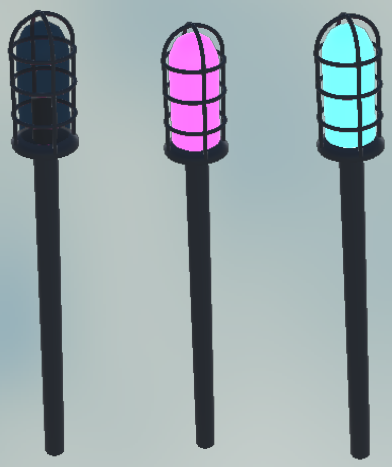

Indicator Lights—Each puzzle has an Indicator Light in one of its top corners. When you complete a puzzle, the light will turn either blue or red. A blue light means you've matched or beaten the puzzle's minimum step count; a red light means you've completed the puzzle in more than the puzzle's minimum step count.

Gameplay

Doors—When you complete a puzzle, part of the wall will open into a door to the next puzzle. Sometimes, doors may open to a new area in the warehouse or a new area of a puzzle.

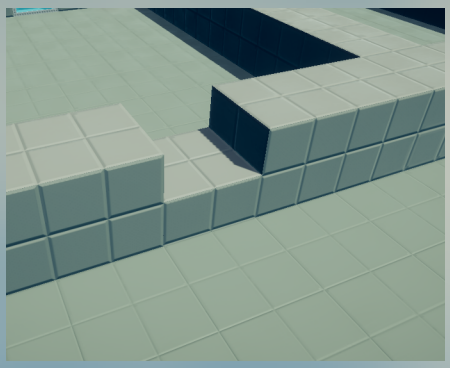

Airwalks—Different areas in the warehouse are connected by airwalks.



Credits

Daniel E Holcomb

- Programming
- Level Design
- Audio Design

Christian Perry

- 3D Artist
- Visual Artist
- Game Design
- Animator

Special Thanks

Allan Maradiaga

Stephanie Long

DeltaCompany

EpsilonLost

Dylbur



